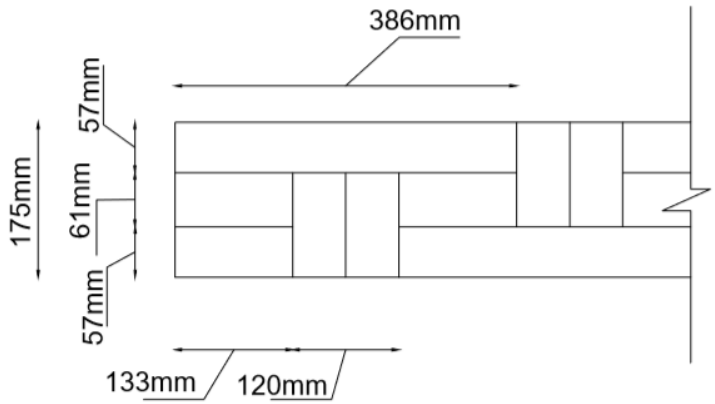
386mm
57mm
175mm
61mm
57mm
133mm
120mm

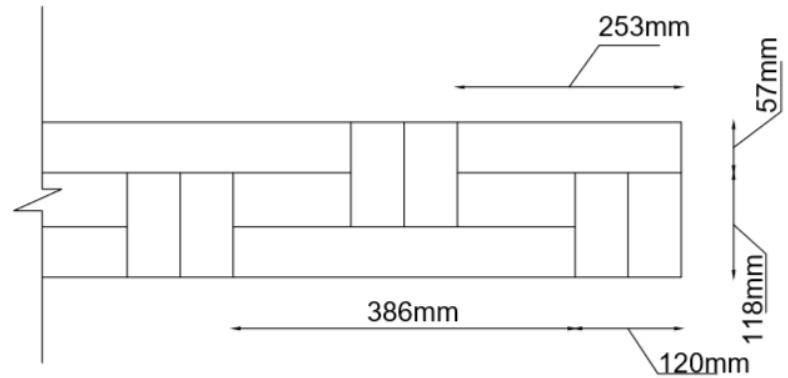
253mm
57mm
118mm
386mm
120mm

Mels

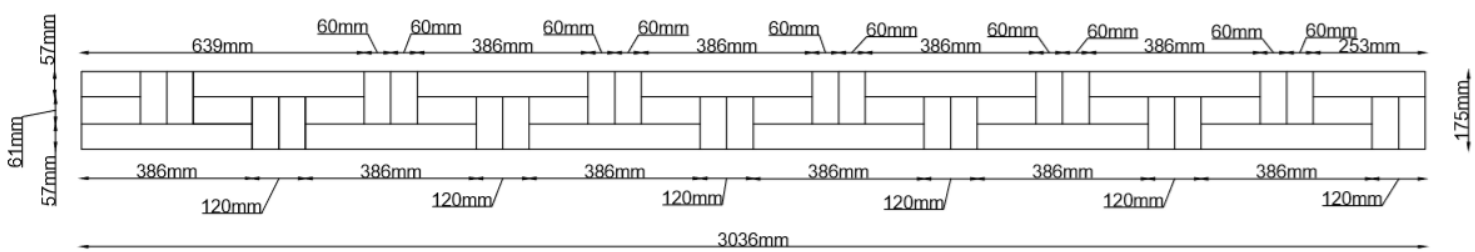
57mm
61mm
57mm
639mm
60mm
386mm
253mm
175mm
120mm
3036mm